LETTER *Special Section on Software Defined Radio Technology and Its Applications*

An Efficient Signed-Power-of-Two Term Allocation for Filter Coefficients in Digital Communication System

Koichi ICHIGE[†a)], ***Member***, **Hideaki MUNEMASA**[†], ***Student Member***, ***and*** **Hiroyuki ARAI**[†], ***Member***

SUMMARY This letter presents an efficient Signed-Power-of-Two (SPT) term allocation for filter coefficients in order to improve the BER characteristics of digital communication systems. The performance of the present allocation is evaluated by BER characteristics through digital modulation simulations and FPGA-based digital implementation.

key words: *digital modulation, BER characteristics, cosine rolloff filter, SPT term*

1. Introduction

In multichannel digital communication system, interference from adjacent frequency channels should be reduced in order to achieve good Bit Error Rate (BER) characteristics for the efficient use of the limited frequency bands. Nyquist digital filters whose impulse response cross zero at every symbol interval are employed for frequency band restriction in the transmitter and interference reduction in the receiver as depicted in Fig. 1. Cosine Rolloff Filter (CRF) or root-CRF are representative of the Nyquist filters used in baseband or IF signal processing for various kinds of communication applications. Such filters are very common devices and generally are not paid so much attention, but they are used in almost all the digital communication system including Software Defined Radio (SDR); most of the SDR transmitters and receivers employ analog and/or digital lowpass filters in order to restrict the frequency bandwidth of signals to a certain short range.

The filter characteristics tend to become worse if we implement the filter on a fixed-point digital device such as Digital Signal Processor (DSP) or Field Programmable Gate Array (FPGA) with shorter bit length quantization. An effective quantization way for filter coefficients would be the use of Signed-Power-of-Two (SPT) term [1], [2]. Representing each filter coefficient as a sum of SPT ($\pm 2^n$) term, the designed filter can be implemented with very small circuit capacity while preserving good frequency characteristics. The literatures [1], [2] mention the way to allocate SPT term to obtain overall good amplitude characteristics, but this allocation is not always the best for communication systems which are evaluated through BER characteristics.

This letter focuses the way of SPT term allocation to improve BER characteristics in communication system. We develop an efficient allocation which allocates more SPT term to the edge of impulse response, and less to the center by introducing weight parameters. We design some root-CRFs and evaluate BER characteristics when those filters are employed in digital modulation scheme.

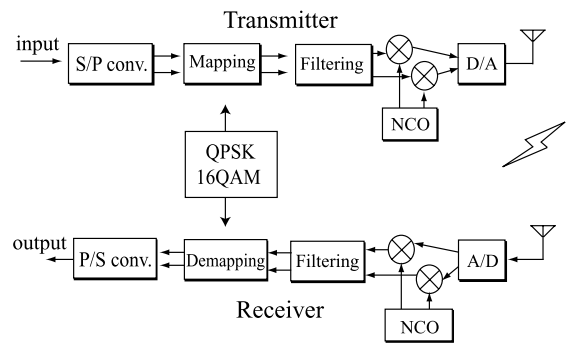

Fig. 1 Basic configuration of transmitter and receiver in wireless digital communication system.

2. SPT Terms Allocation

2.1 Conventional Allocation

Consider an Finite Impulse Response (FIR) filter of order N, and let $\{h_n\}_{n=0}^{N-1}$ be the impulse response of the filter. For the given number of total SPT term $R > 0$, the conventional SPT Terms allocation [2] can be summarized as follows.

1. Let u_n be the number of SPT term corresponding to the impulse response h_n. Initialize $\{u_n\}_{n=0}^{N-1}$, i.e., $u_n = 0$ for $n = 0, 1, \ldots, N-1$.
2. Calculate $c_n = 0.36 \log_2 |h_n|$ for $n = 0, 1, \ldots, N-1$.
3. Find $i \in \{0, 1, \ldots, N-1\}$ which minimize c_n, i.e., $i = \underset{n}{\operatorname{argmin}}\ c_n$. Then operate the followings.

$$u_i + 1 \rightarrow u_i,$$
$$c_i - 1 \rightarrow c_i,$$
$$R - 1 \rightarrow R.$$

4. End if $R = 0$. Otherwise go back to the procedure 3.

This procedure tends to allocate SPT term mainly in the center of the impulse response as shown in Fig. 2(b). It keeps good characteristics in the sense of filter performance in frequency domain, but this allocation is not always the best

Manuscript received March 29, 2006.
Manuscript revised June 30, 2006.
[†]The authors are with the Department of Electrical and Computer Engineering, Yokohama National University, Yokohama-shi, 240-8501 Japan.
a) E-mail: koichi@ynu.ac.jp
DOI: 10.1093/ietcom/e89–b.12.3266

Copyright © 2006 The Institute of Electronics, Information and Communication Engineers

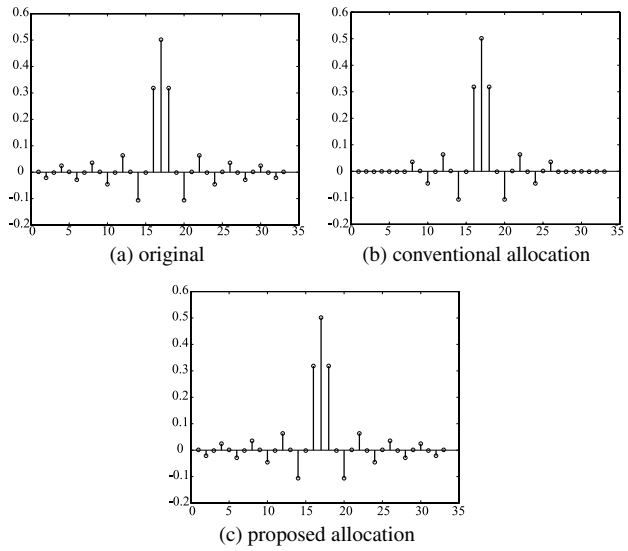

Fig. 2 Example impulse responses of FIR root-CRF when the symbol rate is 2, $N = 35$ and $R = 22$.

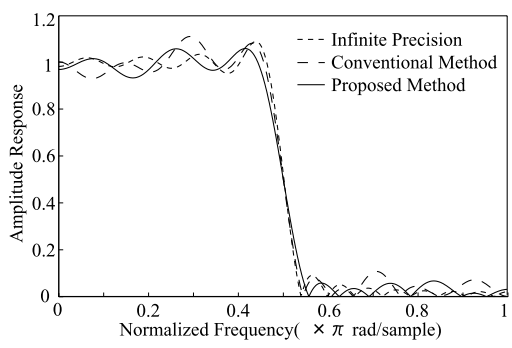

Fig. 3 Example amplitude characteristics of FIR filters in Fig. 2.

way to obtain good BER characteristics in communication system when applied to the coefficients of CRFs or root-CRFs.

2.2 Proposed Allocation

In order to allocate more SPT term to the edge of impulse response, we put weight parameter in calculating c_n in the above procedure. Since it becomes very complicated to determine the weight so that the BER characteristics is optimized, we tested hundreds of different simple forms of weights and found that the following weight representation is suitable for CRF and root-CRF coefficients used in digital modulation system.

$$w_n = \left(\left\lceil \frac{N}{2} \right\rceil - |n|\right)^3 + \left\lceil \frac{N}{2} \right\rceil,$$

where $\lceil a \rceil$ denotes a minimum integer not smaller than a. Using the above weight, we modify the SPT term allocation procedure as follows. This procedure could allocate SPT term to the edge of impulse response as seen in Fig. 2(c).

1. Same to the procedure 1. in Subsection 2.1.

Table 1 Specifications of simulation.

Modulation type	Desired: QPSK / 16QAM Interference: 8PSK
Frequency Range	Desired: [0 MHz, 10 MHz] Interference: [10 MHz, 20 MHz]
CIR	0 [dB]
Sampling frequency	40 MHz
Filter type	Root CRF, lowpass
Filter order N	35
Cutoff frequency	10 [MHz]
Rolloff Rate	0.5
# of SPT Terms	30

2. Calculate $c_n = 0.36 \log_2 |w_n h_n|$ for $n = 0, 1, \ldots, N-1$.
3. Same to the procedure 3. in Subsection 2.1.
4. Same to the procedure 4. in Subsection 2.1.

Figure 3 shows example amplitude characteristics of the designed FIR root CRFs in Fig. 2. The amplitude characteristics are almost similar to each other at a glance but that by Ref. [2] has some relatively large ripples in pass- and stop-bands in comparison with the result by the proposed method. It may be negligible from filter characteristics but still affects to digital communication quality.

3. Simulation

The proposed SPT term allocation is evaluated through computer simulation whose specifications are summarized in Table 1. We assume the case that the frequency band for desired signal and that for interference are next to each other, and demonstrate to suppress the interference.

Figure 4 shows the BER characteristics for (a) QPSK signals and (b) 16QAM signals. Note that the case of 2-bit quantization has almost the same computational complexity when $N = 35$ and $R = 30$. We see that the BER characteristics by the proposed SPT term allocation is more effective than the other quantization methods, and realize almost the same performance with infinite precision. Especially when BER stays around 10^{-4} to 10^{-5}, means the significant range for high quality communication, the proposed allocation greatly improves BER characteristics. Note that we tested various situations (modulation type, frequency, filter order, number of SPT term) and confirmed the similar improvements, however space does not permit to show them all.

4. Implementation

A QPSK/16QAM demodulator using root-CRF developed in Sections 2 and 3 is implemented on FPGA-based digital device [3]. Table 2 shows the specifications of the digital processor; those for signals and filters are same with Table 1. Also Fig. 5 describes an overview of the processing flow on digital processor.

Table 3 compares the circuit scale when all the digital demodulation and related processes are implemented on FPGA. The SPTterm-based implementation requires small

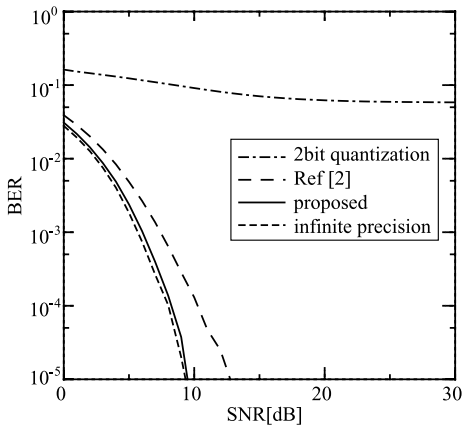

(a) For QPSK signals.

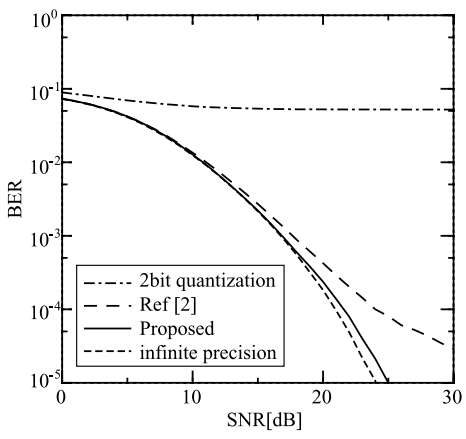

(b) for 16QAM signals

Fig. 4 BER characteristics for QPSK and 16QAM signals.

Table 2 Specification of FPGA-based QPSK/16QAM demodulator.

A/D converter	40 MHz/12bit sampling
CPU	Hitachi SH4, 200 MHz
FPGA	Altera Stratix EP1S25 (600,000 gates)
Interface	TCP/IP Ethrenet port

number of logic elements and no any multiplier since shift register can be used instead, while the direct implementation requires multiplication (DSP block on FPGA) for the convolution of impulse response and large number of logic elements. We see that the proposed allocation enables small circuit capacity, multiplierless implementation and high clock frequency. Also note that the BER characteristics obtained by the experiments completely overlaps the simulation results in Fig. 4.

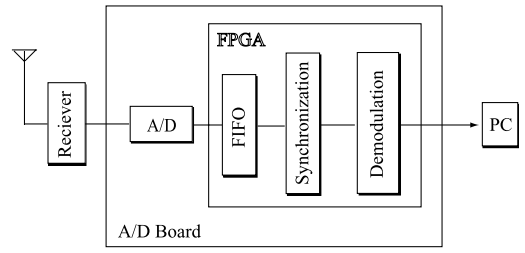

Fig. 5 Processing flow of FPGA-based QPSK/16QAM demodulator.

Table 3 Comparison of circuit scale.

	direct implementation	SPTterm-based implementation
Logic elements	893	293
Clock frequency	67.9 MHz	74.4 MHz
# of DSP blocks	33	0

5. Concluding Remarks

This letter presented an effective SPT term allocation for filter coefficients in order to improve BER characteristics in digital communication system. The present allocation was evaluated through computer simulation and FPGA-based digital implementation, and found that the proposed SPT term allocation is effective for digital modulation system.

References

[1] J.J. Shyu and Y.C. Lim, "A new approach to the design of discrete coefficient FIR digital filters," IEEE Trans. Signal Process., vol.43, no.1, pp.310–314, Jan. 1995.

[2] Y.C. Lim, R. Yang, D. Li, and J. Song, "Signed power-of-two terms allocation scheme for the design of digital filters," IEEE Trans. Circuits Syst. II, vol.46, no.5, pp. 577–584, May 1999.

[3] M. Kim, A. Kiyono, K. Ichige, and H. Arai, "Experimental study of jitter effect on digital downconversion receiver with undersampling scheme," IEICE Trans. Inf. & Syst., vol.E88-D, no.7, pp.1430–1436, July 2005.